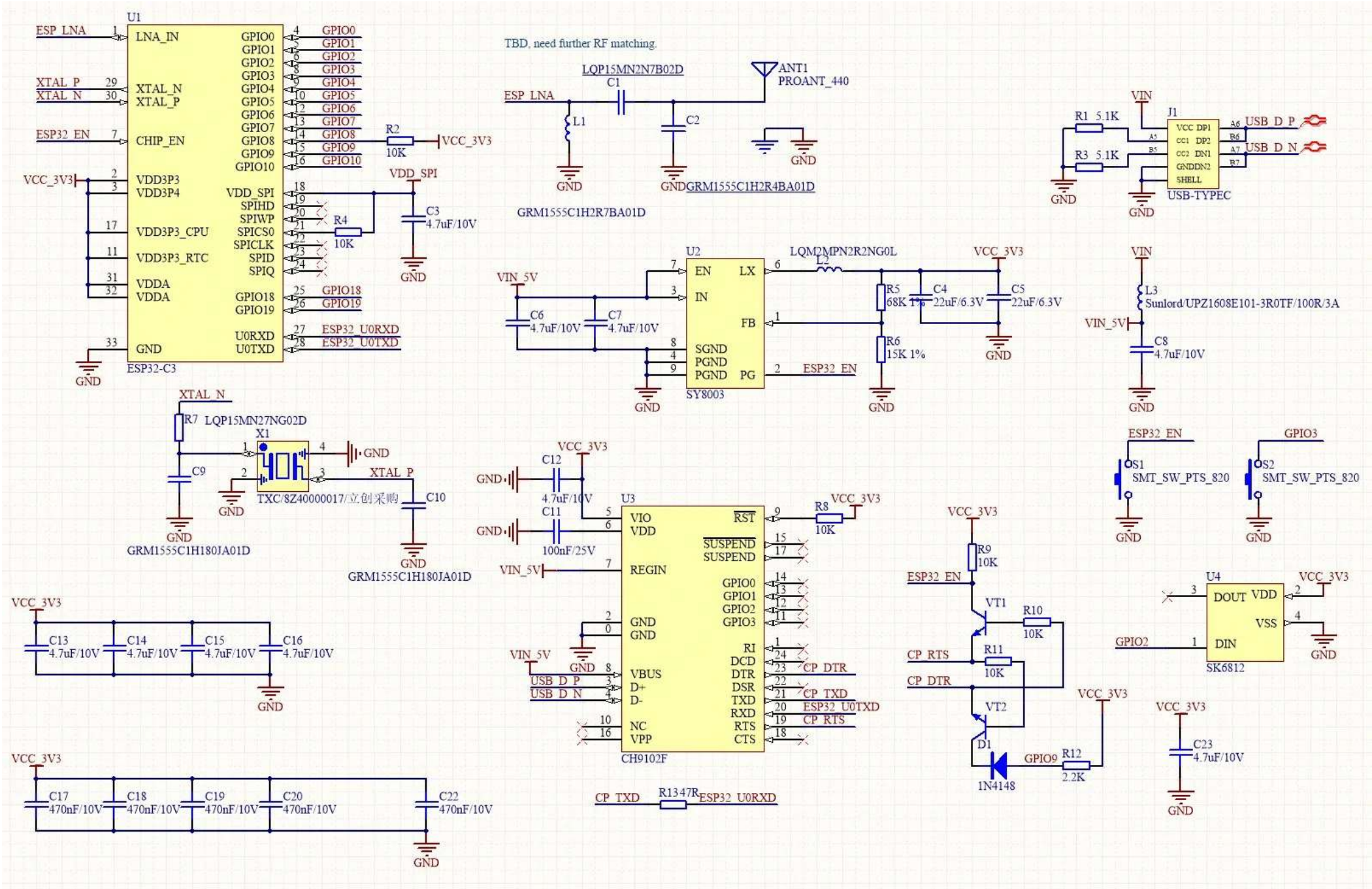
U1
ESP_LNA
LNA_IN
XTAL_P
XTAL_N
ESP32_EN
CHIP_EN
VCC_3V3
VDD3P3
VDD3P4
VDD3P3_CPU
VDD3P3_RTC
VDDA
GND
GPIO0
GPIO1
GPIO2
GPIO3
GPIO4
GPIO5
GPIO6
GPIO7
GPIO8
GPIO9
GPIO10
VDD_SPI
SPIHD
SPIWP
SPICS0
SPICLK
SPID
SPIQ
GPIO18
GPIO19
U0RXD
U0TXD
ESP32_U0RXD
ESP32_U0TXD
ESP32-C3
R2
10K
R4
10K
C3
4.7uF/10V
TBD, need further RF matching.
LQP15MN2N7B02D
C1
L1
C2
ANT1
PROANT_440
GRM1555C1H2R4BA01D
GRM1555C1H2R7BA01D
VIN
R1 5.1K
R3 5.1K
J1
VCC DP1
CC1 DP2
CC2 DN1
GNDDN2
SHELL
USB_D_P
USB_D_N
USB-TYPEC
U2
EN
IN
LX
FB
SGND
PGND
PG
SY8003
VIN_5V
C6
4.7uF/10V
C7
4.7uF/10V
LQM2MPN2R2NG0L
L2
R5
68K 1%
C4
22uF/6.3V
C5
22uF/6.3V
R6
15K 1%
L3
Sunlord/UPZ1608E101-3R0TF/100R/3A
C8
4.7uF/10V
XTAL_N
R7 LQP15MN27NG02D
X1
C9
TXC/8Z40000017/立创采购
XTAL_P
C10
GRM1555C1H180JA01D
C12
4.7uF/10V
C11
100nF/25V
U3
VIO
VDD
REGIN
GND
VBUS
D+
D-
NC
VPP
RST
SUSPEND
GPIO0
GPIO1
GPIO2
GPIO3
RI
DCD
DTR
DSR
TXD
RXD
RTS
CTS
CP_DTR
CP_TXD
ESP32_U0TXD
CP_RTS
CH9102F
R8
10K
ESP32_EN
GPIO3
S1
S2
SMT_SW_PTS_820
R9
10K
VT1
R10
10K
R11
10K
VT2
D1
1N4148
GPIO9
R12
2.2K
U4
DOUT
DIN
VDD
VSS
GPIO2
SK6812
C23
4.7uF/10V
C13
C14
C15
C16
4.7uF/10V
C17
C18
C19
C20
470nF/10V
C22
470nF/10V
R13
47R