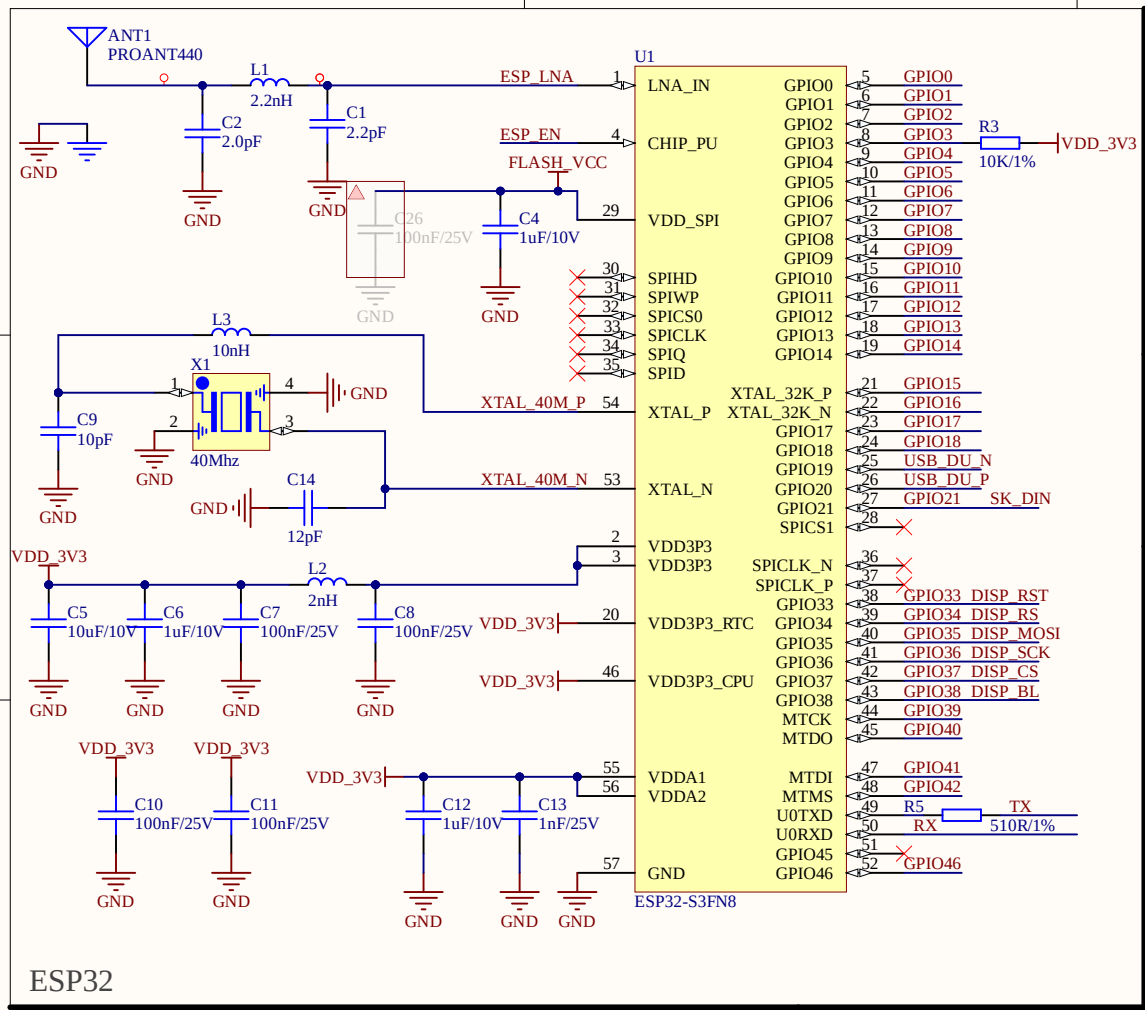
ESP32
U1
ESP32-S3FN8
ANT1
PROANT440
L1
2.2nH
C2
2.0pF
C1
2.2pF
C26
100nF/25V
C4
1uF/10V
R3
10K/1%
L3
10nH
X1
40Mhz
C9
10pF
C14
12pF
L2
2nH
C5
10uF/10V
C6
1uF/10V
C7
100nF/25V
C8
100nF/25V
C10
100nF/25V
C11
100nF/25V
C12
1uF/10V
C13
1nF/25V
R5
510R/1%
ESP_LNA
ESP_EN
FLASH_VCC
XTAL_40M_P
XTAL_40M_N
VDD_3V3
TX
RX
SK_DIN
USB_DU_N
USB_DU_P
GND

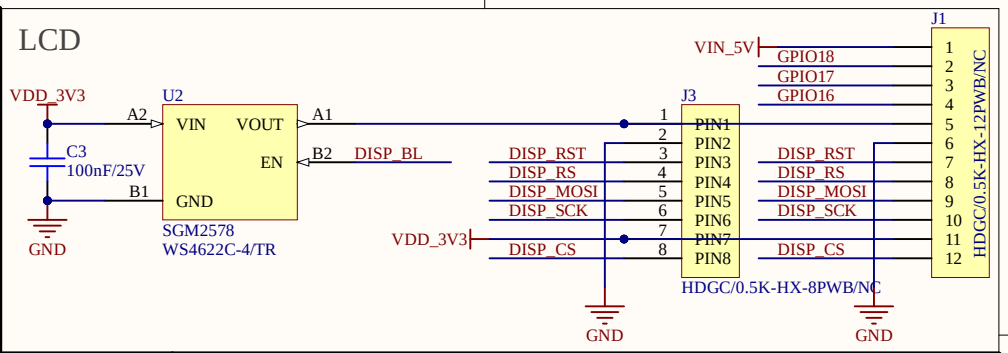
LCD
U2
SGM2578
WS4622C-4/TR
C3
100nF/25V
J3
HDGC/0.5K-HX-8PWB/NC
J1
HDGC/0.5K-HX-12PWB/NC
VIN_5V
VDD_3V3
DISP_BL
DISP_RST
DISP_RS
DISP_MOSI
DISP_SCK
DISP_CS
GPIO18
GPIO17
GPIO16
GND

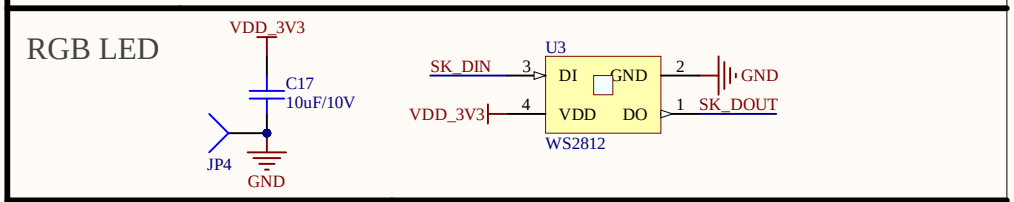
RGB LED
VDD_3V3
C17
10uF/10V
JP4
U3
WS2812
SK_DIN
SK_DOUT
GND

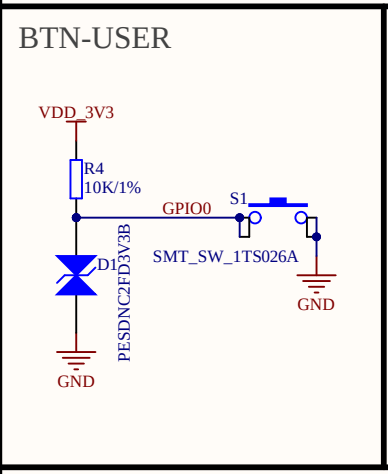
BTN-USER
VDD_3V3
R4
10K/1%
GPIO0
S1
SMT_SW_1TS026A
D1
PESDNC2FD3V3B
GND

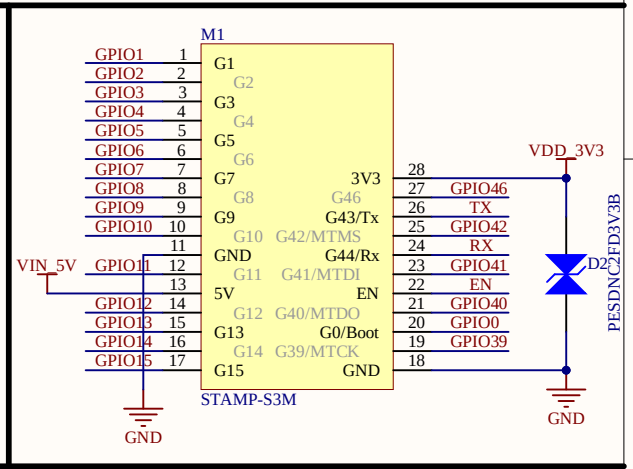
M1
STAMP-S3M
VDD_3V3
VIN_5V
D2
PESDNC2FD3V3B
GND

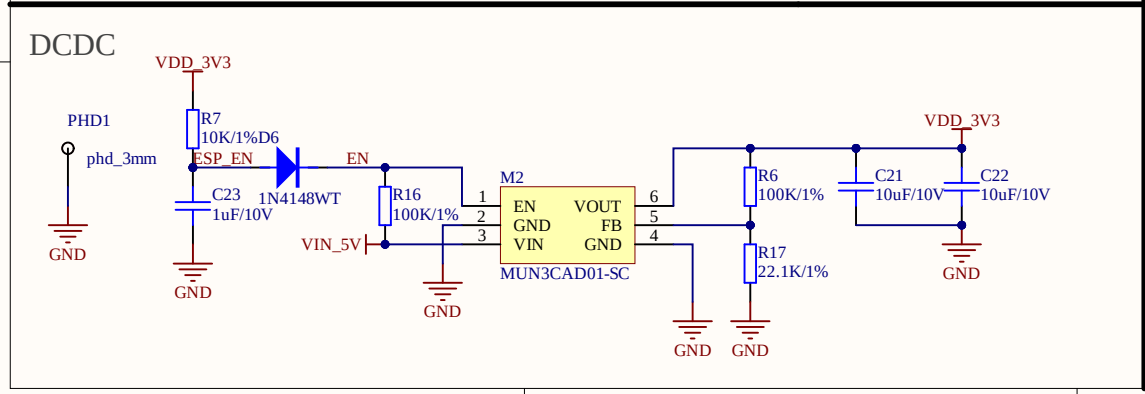
DCDC
VDD_3V3
PHD1
phd_3mm
R7
10K/1%D6
ESP_EN
EN
1N4148WT
C23
1uF/10V
R16
100K/1%
VIN_5V
M2
MUN3CAD01-SC
R6
100K/1%
R17
22.1K/1%
C21
10uF/10V
C22
10uF/10V
GND

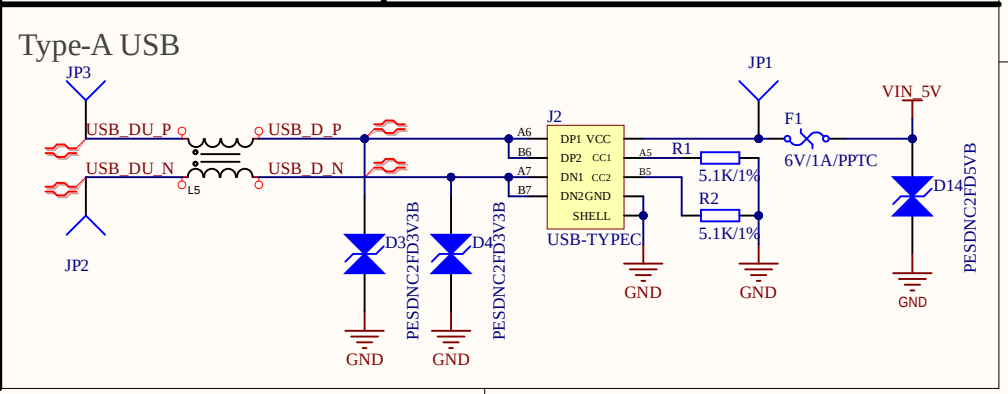
Type-A USB
JP3
JP2
USB_DU_P
USB_DU_N
USB_D_P
USB_D_N
L5
D3
D4
PESDNC2FD3V3B
J2
USB-TYPEC
R1
5.1K/1%
R2
5.1K/1%
JP1
F1
6V/1A/PPTC
VIN_5V
D14
PESDNC2FD5VB
GND